Art 250

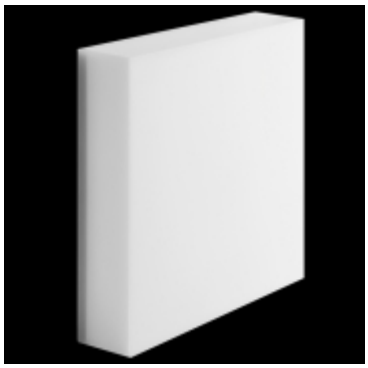

Generality

Type of product	Wall, Ceiling
Diffuser	Polycarbonate poliGLASS / poliGLASS
Model	Art
Producer	Lombardo S.r.l.
Design	design by Italo Belussi - Cristian Tengattini
Code	LL116100
E.A.N. code	
Pieces per package	4 pieces

N = (4000K)
3 = (3000K, lm -5%)
2 = (2700K, lm -5%)

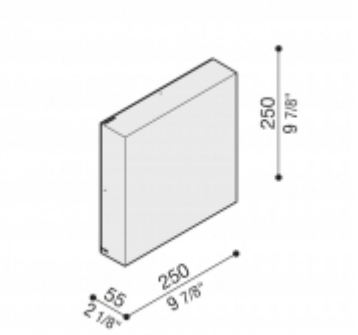

Characteristic

Insulation class	CL.II
Type of protection	IP 66
IK	IK 10 20J xx9
Lamp type	54 LED 2200 lm 20W real output lm 1656 Led versions with integral ballast
Energy performance class	A A+ A++

Standards and Marks of Conformity

CE

Product description

Also suitable for outdoor use. Integrated 220 - 240V ballast and latest generation Led modules. White polycarbonate base, injection moulded in-house. Very thick polycarbonate diffuser with triple UV stabilisation and PolyGLASS finish, injection moulded in-house. Silicone gaskets to maintain IP66 rating. Snaps open and closed without screws. Provision for safety screws. Securing kit included to maintain IP rating.
LED 4000K (N), 3000K (3) or 2700K (2). LED. Integral ballast 220-240V.
No risk of photobiological damage, RG0 group (EN62471).

Lombardo S.r.l.
24060 Villongo (Bergamo) ITALIA
Via Pizzigoni, 3

Tel.: 0039 035 939 411
Fax: 0039 035 939 496
Tel. Export: 0039 035 939 495
http://www.lombardo.it

Info: info@lombardo.it
Italia: commerciale.italia@lombardo.it
Export: export@lombardo.it
Ufficio Tecnico: tecnico@lombardo.it